Audio Mixer w/ Power Supply Unit

A Simple 2 Channel Audio Mixer Circuit with Independent Power Supply Unit

Anan Faiyaz Radin
Dept. of Electricl and Computer Engineering
Northsouth University
Dhaka, Bangladesh.
anan.radin@northsouth.edu

Afif Bin Jashim
Dept. of Electricl and Computer Engineering
Northsouth University
Dhaka, Bangladesh.
afif.jashim@northsouth.edu

M. Musfiqur Rahman
Dept. of Electricl and Computer Engineering
Northsouth University
Dhaka, Bangladesh.
mushfiqur.rahman030@northsouth.edu

***Abstract*— Audio Mixers are can add, amplify and adjust multiple audio signals and provide a required audio output. A simple implementation of this can be used with the help of the LM741 IC from Texas Instruments, which is a general-purpose Operational Amplifier Package. This paper aims to achieve a simple implementation of audio mixers as they are an important building block of signal processing as well as mundane audio applications.**

Keywords—Power Supply, Operational Amplifier, Line Level, Audio, Amplification, 2 Channel Audio Mixer, LM741 Mixer.

I. Introduction

In order to combine different audio input signals together; an audio mixer is used. These inputs can be anything ranging from a simple microphone input, Audio line out from any device like- Smartphone, PC, CD player or any other similar sources.

A basic Audio Mixer circuit takes the input from several such sources, combines them together and outputs a suitable signal to a playback device like a speaker. It is possible to adjust the individual channel gains of each source to obtain an output signal that matches our desired expectations. It is also possible to adjust the overall volume gain of the mixer circuit.

The goal of this project is to use a dual channel audio mixer that takes two input source signals, namely – an audio signal from a microphone and background audio from a smartphone line out. The mixer will be capable of individually adjusting the channel input gains and the overall gain.

For simplicity's sake, we avoid constructing separate pre-amplifier units for each input source channels. The sources are directly processed by a summing unit which is primarily constructed with a Operational Amplifier at its heart used in the inverting adder configuration

For ease, we divide the project into 3 separate segments; ***The Power Supply Unit, The Summing Unit & Auxiliary Unit..***

II. Literature Review

Various implementations of audio mixers using OPAMPS are already available which are more complex in nature and more complicated to implement in practical cases.

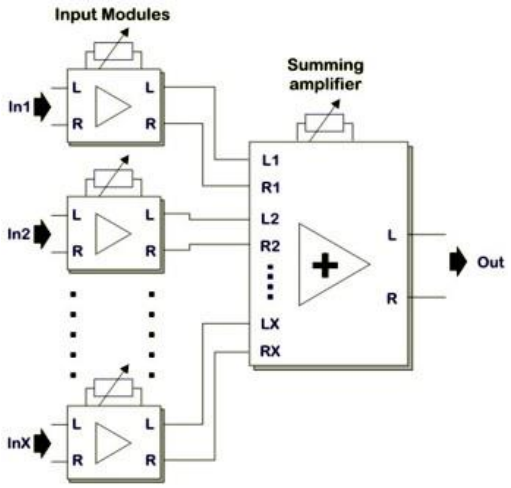

Figure-2A: Block Diagram of a Full X-Channel Stereo Mixer Circuit.

Again, each of the input modules are built using individual pre-amplification circuits.

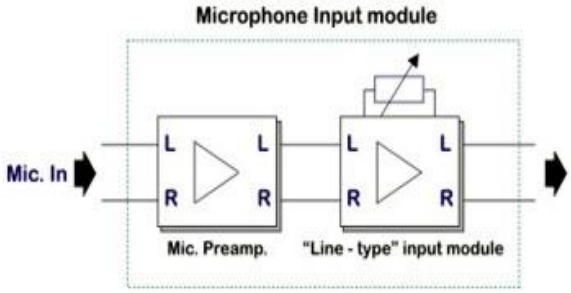

Figure-2B: Block Diagram of a Mic Input Module

This project aims to implement a simpler version for students and for experimental purposes.

III. Implementation

For the implementation, we ascertain the parts & equipment's list after affixing the ratings in the simulation.

A. The Power Supply Unit

This unit is responsible for delivering proper supply to our circuit. Since our summing unit will be constructed using

XXX-X-XXXX-XXXX-X/XX/$XX.00 ©20XX IEEE

operational amplifier and it will be amplifying an audio signal; it is necessary to have V+ & V- as the OPAMP supply.

The unit will take VDC input and provide us with 3 Supply Rails- **i. V+ ii. V- iii. Ground**

This unit is constructed using a LM741 IC as a virtual ground generator along with some external components. Conceptual Aid is taken from an auxiliary website.

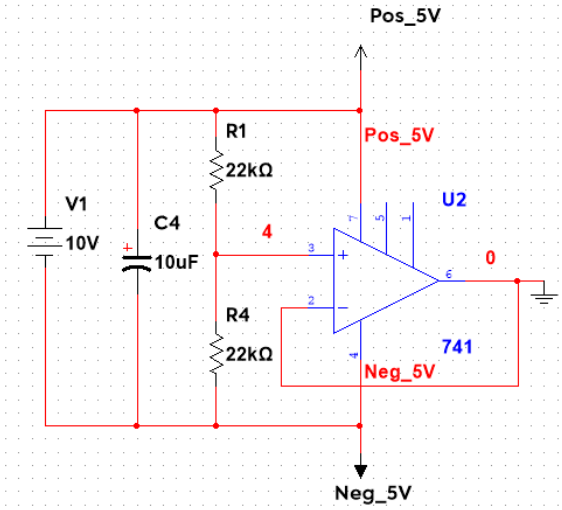

Fig-1A- Circuit Schematic for PS Unit implemented in MULTISIM

We construct & simulate the unit circuit in MULTISIM foremost. Conceptual Aid is taken from an auxiliary website.

In the following circuit schematic, we find that at Node 0, we obtain the Virtual Ground, and consequently at the positive and negative terminals obtain V+ and V- respectively.

For 11V DC input, we obtain 0V Virtual Ground at Node 0. Then, approximately half the input voltages at nodes Pos_5V and Neg_5V, in opposite polarities. Thus, we obtain, V+ = 5.5 V, V- = -5.5 V and Ground = 0V approximately.

After running simulation for the circuit, we implement the circuit on a breadboard.

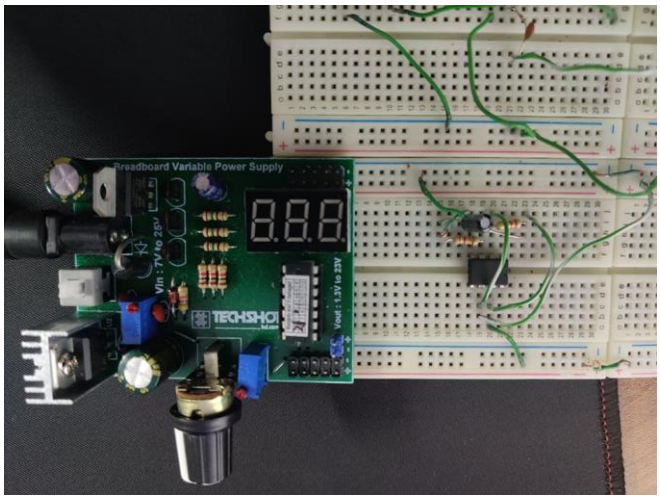

Figure-1B: Implementation of Power Supply Unit on Breadboard

We make use of a breadboard power supply module for the DC Supply V1 and then construct the remainder of the schematic.

B. The Summing Unit

This unit is responsible for summing our two input source signals and adjusting their individual gains as well as the overall gain according to necessity. Here a single LM741 IC is utilized in the inverting adder configuration along with some external components and with the supply rails obtained from the previous unit.

The ratings of the external components are set and designed in such a way that we can obtain the maximum amplification from the set values of the components.

We ascertain the values by constructing the circuit in MULTSIM and through trail and error process of selecting values.

By making use of auxiliary references, we find out that the line levels of our input sources. A human voice through a microphone outputs around 0.001 V pk-pk around 120-200 Hz. And, an audio out from a phone outputs around 0.0055 V pk-pk around 200-400Hz.

The output device we are using is a 2W 8 Ohm Speaker. And for this reason, we need an output maxing out around 4 Volts.

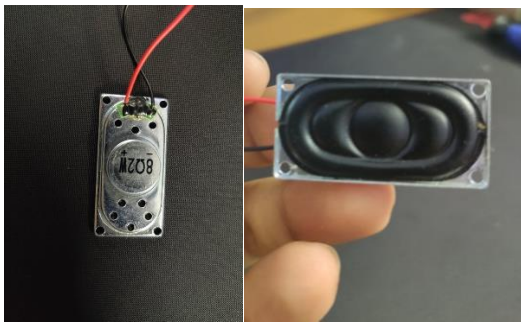

Figure-1C: Used Speaker 2W 8 Ohm

So, we require a minimum amplification factor of

$$\text{Gain} = 4V/0.001V = 4000\ V/V$$

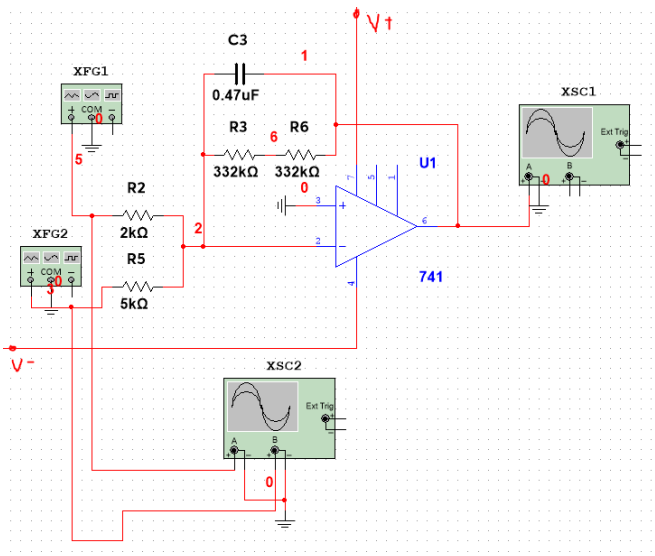

Figure-1D: Circuit Schematic for Summer in Multisim

After running simulation for the circuit, we implement the circuit on a breadboard. We utilize the supply rails from unit 1 for this.

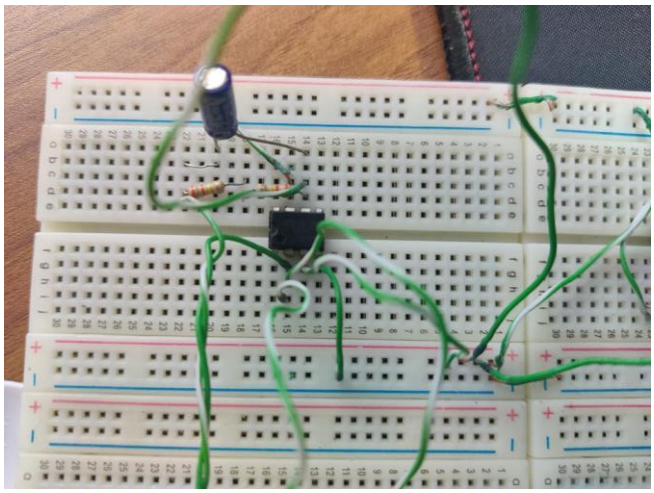

Figure-1E: Implementation of Summer (Audio Mixer) in Multisim

The speaker outputs are connected to the Out Terminal & Ground. The remaining connections are made after constructing the auxiliary unit.

C. *Auxilliary Units*

We already have our supply and summer unit of the circuit. Now we construct the auxiliary units; which are the input segment and the gain adjustment segment for the audio mixer.

Firstly, we take a look at the schematics for a 3.5mm Audio Jack which is the International Standard for Audio Line Outs. To make connecting to the breadboard easier from a standard microphone device and a standard audio line in easier; we make use of an Audio Jack Breakout Module.

Figure-1F: 3.5mm Audio Jack Breakout Module

We connect the Ground to the common ground and the TIP terminal to the input terminals of the summer unit for both the mic and line in modules.

Next, we construct the adjustment segment using 3 Variable Potentiometers. The first is connected in series with the feedback resistor. The next 2 are connected in line with the 2 input signal lines each respectively. Thus, we obtain variable gains for our channels and output.

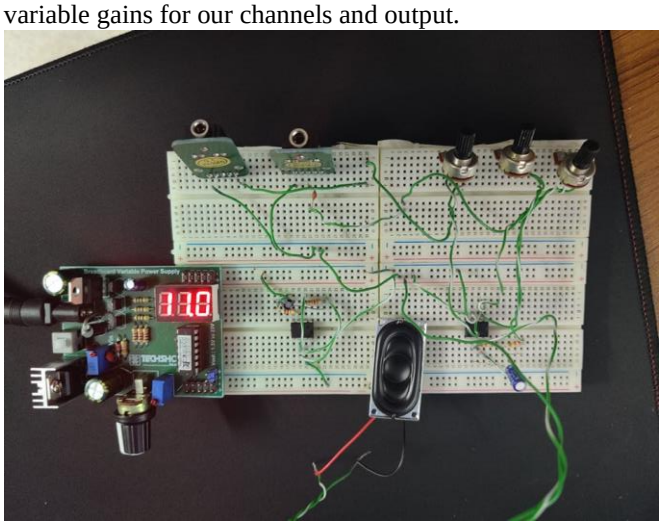

Figure-1G: Implementation of all units together.

IV. Simulation

We connect all the units of our simulation to form the total simulation circuit for our Audio Mixer. We then connect three oscilloscope channels to the two input signals and the output signal to observe if the ratings for the external feedback components and the connection are all perfect.

We connect two function generators, each generating a sine wave for the 2 input signals. One replicating a human voice through a microphone, which outputs around 0.001 V pk-pk around 120-200 Hz. And, another audio out from a phone which outputs around 0.0055 V pk-pk around 200-400Hz.

Running the interactive simulation, we obtain the required results

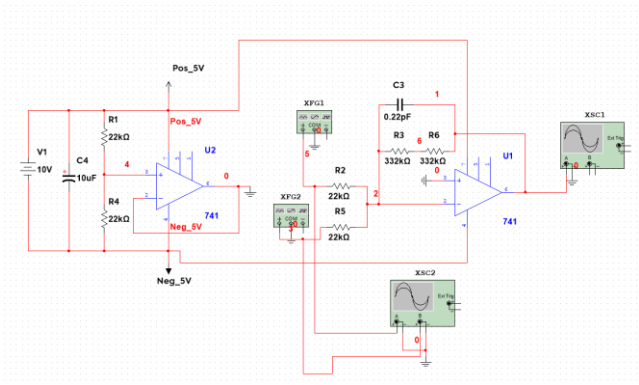

Figure-4A: MULTISIM implementation of complete Audio Mixer

V. Results

A. *Simulation Results*

The simulation delivers expected gain values and outputs a proper signal mixing the two input signals from voice and background.

The replicated input signals are-

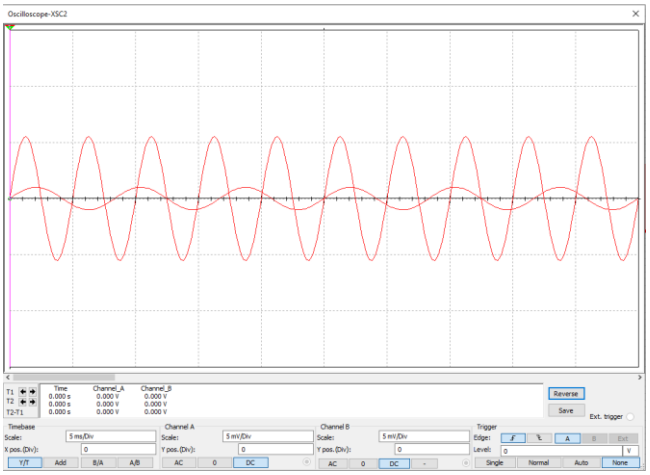

Figure-5A: Replicated Input Waveforms of Human Voice & BG Music

The output waveform is-

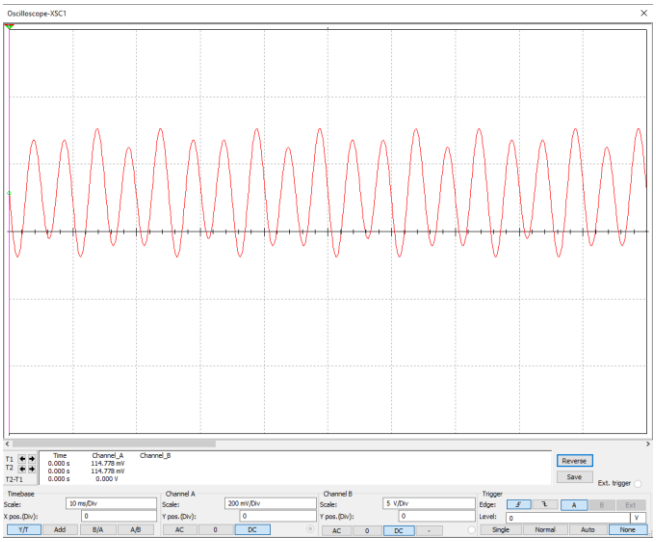

B. *Practical Results*

Through practical implementation of the circuit, we find that the gain is not as much as expected. And there is presence of a lot of noise with the output audio.

Figure-5B: Output Waveform of Audio Mixer

By analyzing we can attribute the noise to environmental factors and due to imperfections in the electronic equipment.

It is also noticeable that the voice signal in the output audio is barely noticeable. This is because of the low output of real-world microphones.

In ideal scenarios or proper application projects, Pre-Amplifiers, Filters and Tone Control may be added to the mixer circuit in order to overcome these shortcomings.

VI. Conclusion

Finally, we can conclude that the project as a success, through which we were able to understand the simple implementation of an Audio Mixer Circuit as well as the practical limitations of implementing such a circuit in simpler terms. It was an overall enlightening and proper learning experience for the involved students.

Acknowledgment

This project wouldn't have been possible without the guidance of our course Instructor Mrs. Nafisa Noor & due guidance of our lab instructor Mr. Abdullah Al Noman. We are grateful for their support.

References

Fuston, L. (2020, December 5). *Understanding Signal Levels in Audio Gear*. InSync. https://www.sweetwater.com/insync/understanding-signal-levels-audio-gear/

How to Build an Audio Mixer Circuit. (n.d.). Audio Mixer. Retrieved September 13, 2021, from https://www.circuitlib.com/index.php/tutorials/product/39-how-to-build-an-audio-mixer

Microphones, D. (2021, March 3). *FACTS ABOUT SPEECH INTELLIGIBILITY*. DPA. https://www.dpamicrophones.com/mic-university/facts-about-speech-intelligibility

Virtual Ground Circuits. (n.d.). TangentSoft. Retrieved September 13, 2021, from https://tangentsoft.net/elec/vgrounds.html